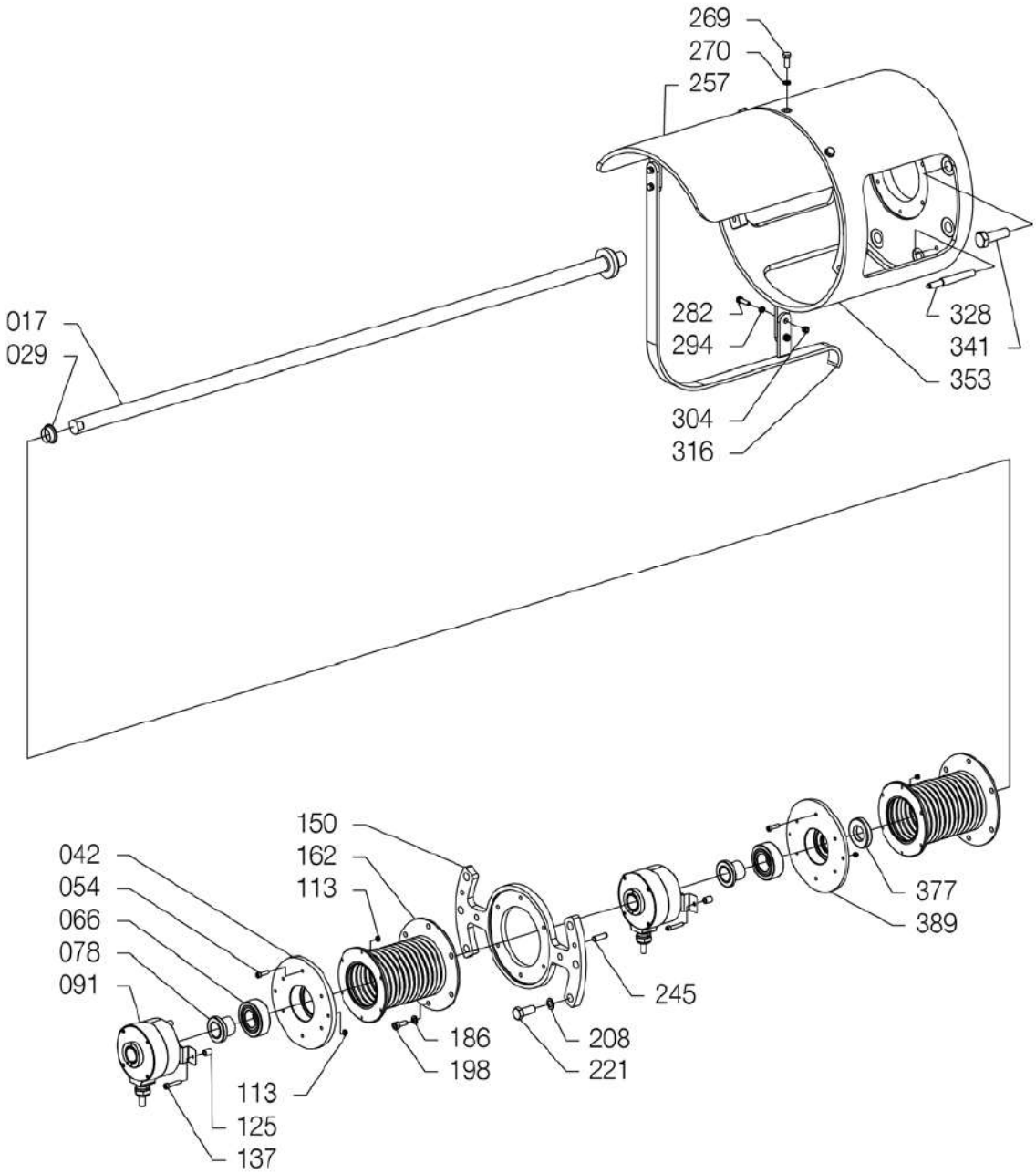

Angle Encoder

Plate
7072-1100-0006

2013-02-15 - en

Angle Encoder

Item no	Qty	Designation
017	-	Shaft
029	-	Sleeve
042	-	Flange
054	-	Screw
066	-	Ball bearing
078	-	Bearing sleeve ball brg.*
091	-	Angle encoder
113	-	Self-locking nut
125	-	Distance ring
137	-	Screw
150	-	Flange
162	-	Compensator
186	-	Spring lock
198	-	Screw
208	-	Cam lock washer**
221	-	Screw
245	-	Guide pin
257	-	Bracket
269	-	Screw
270	-	Cam lock washer**
282	-	Screw
294	-	Cam lock washer**
304	-	Nut, self-locking
316	-	Bracket
328	-	Tapered dowel
341	-	Screw
353	-	Bracket
377	-	Shaft seal
389	-	Flange

*Note: * Nuts, washer, etc., included.*

*Note: ** Cam lock washers are to be supplied by MAN Diesel Turbo only*

2013-02-15 - en

Plate 7072-1100-0006